CURS 10 15.05.2019

Circuite basculante monostabile

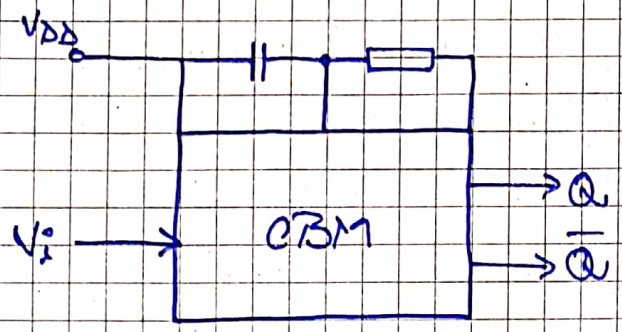

- stare bine determinată la început
- CBM
  - neredeclanșabile
  - redeclanșabile

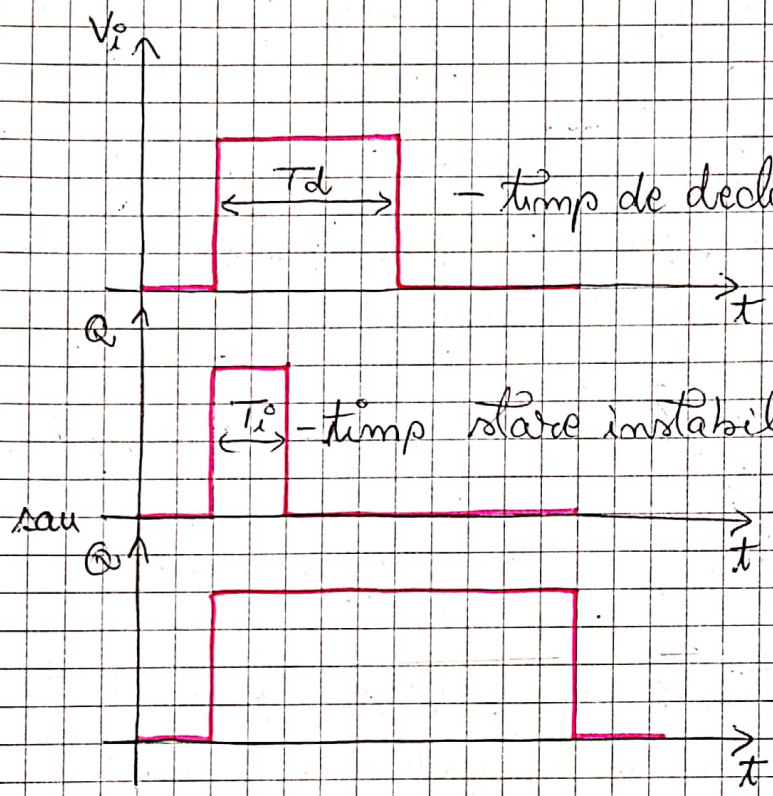

– timp de declanșare

– timp stare instabilă

$T_i \sim (RC)$

a) neredeclanșabil

b) redeclanșabil

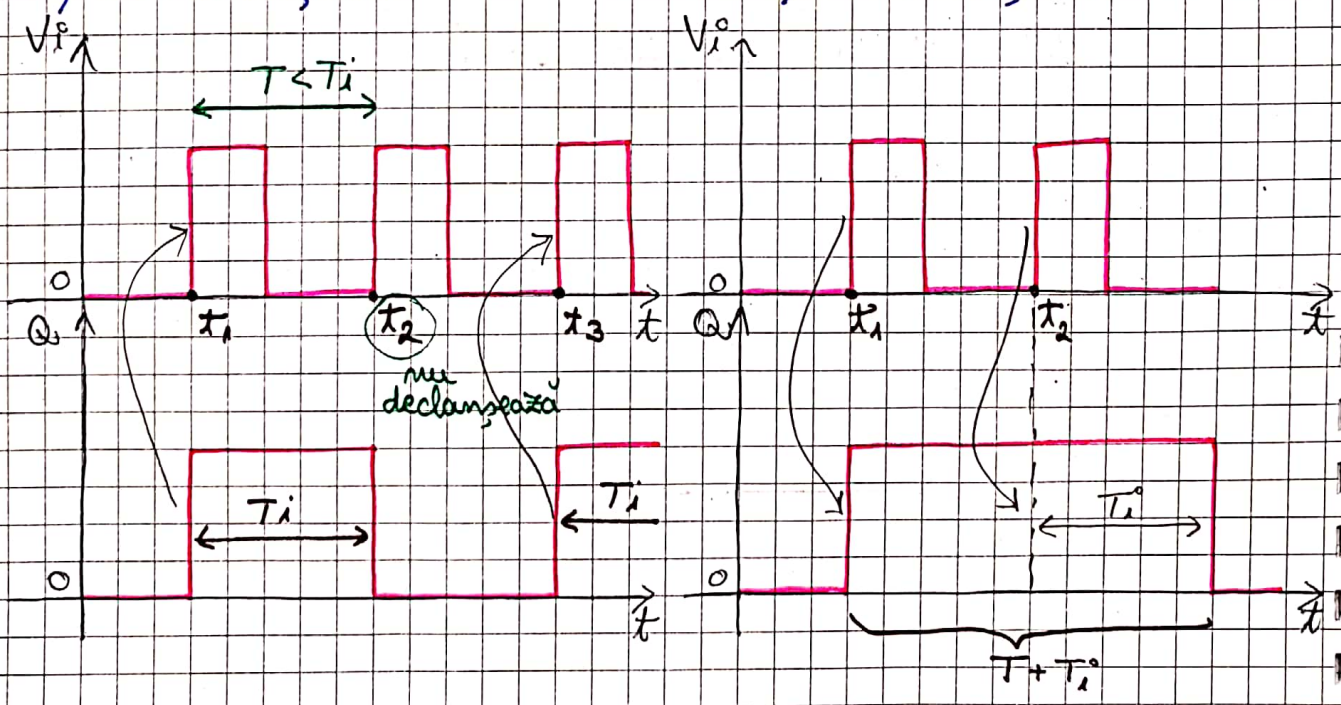

Scanned by CamScanner

Circuite basculante monostabile cu TTL

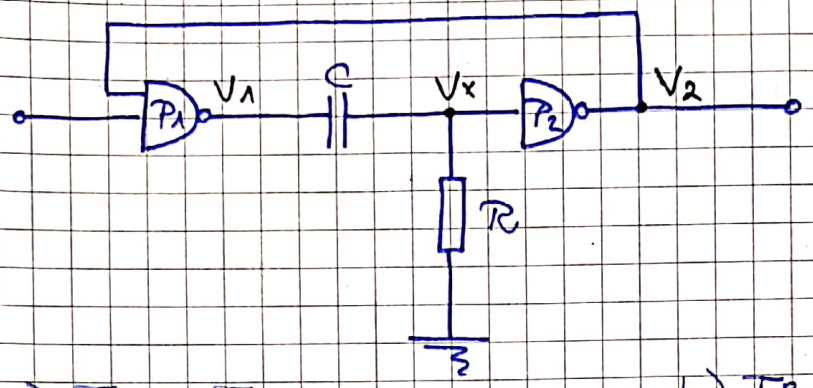

a) $T_i^o > T_d$

b) $T_i^o < T_d$

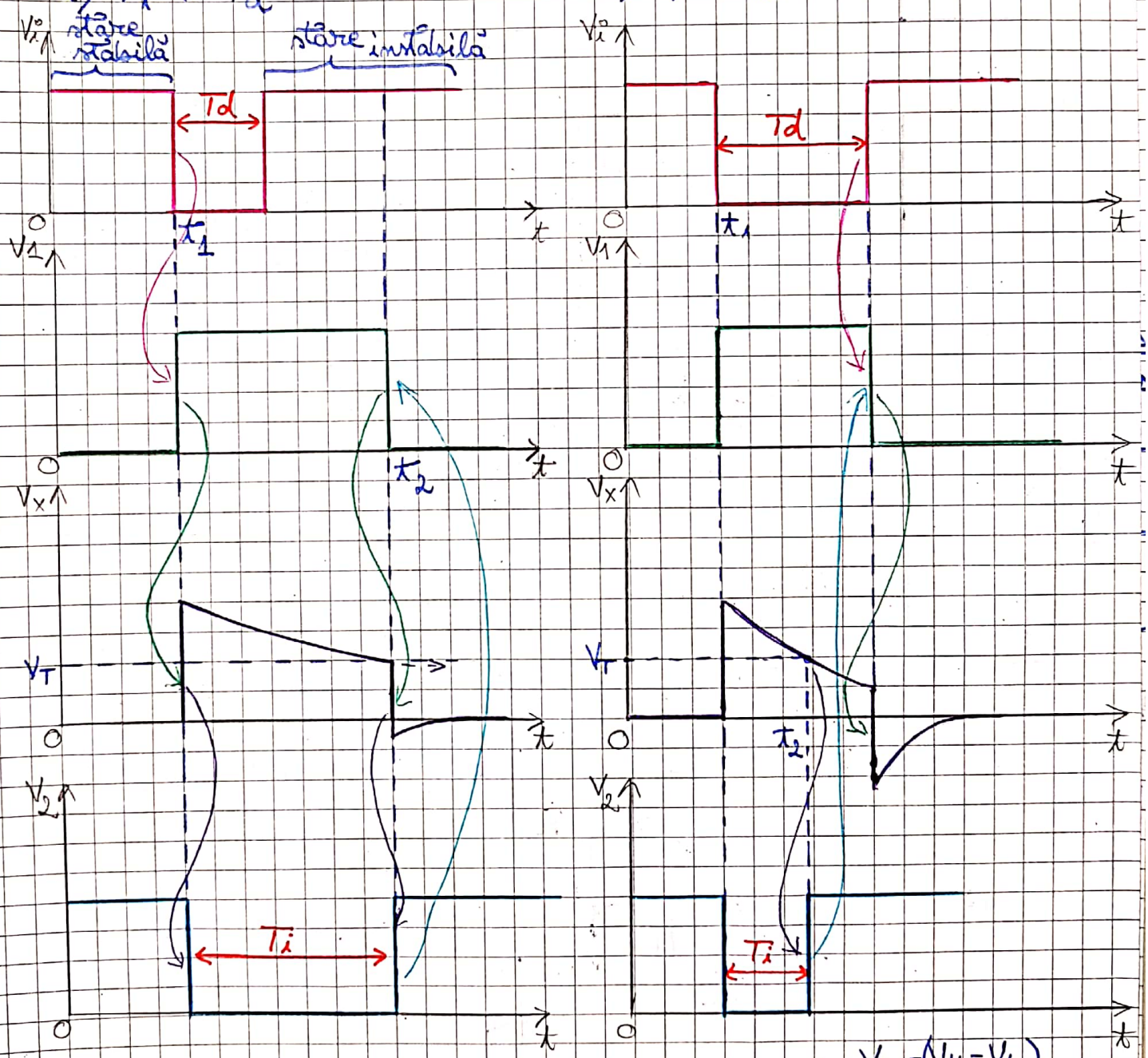

$Q = V_o = V_2$

$$T_i^o = RC \ln \frac{V_L - (V_H - V_L)}{V_L - V_T}$$

- La momentul t_1 se dă comanda de declanșare

Circuite basculante monostabile cu CMOS

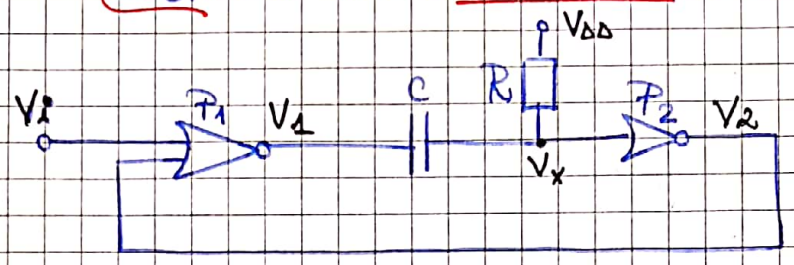

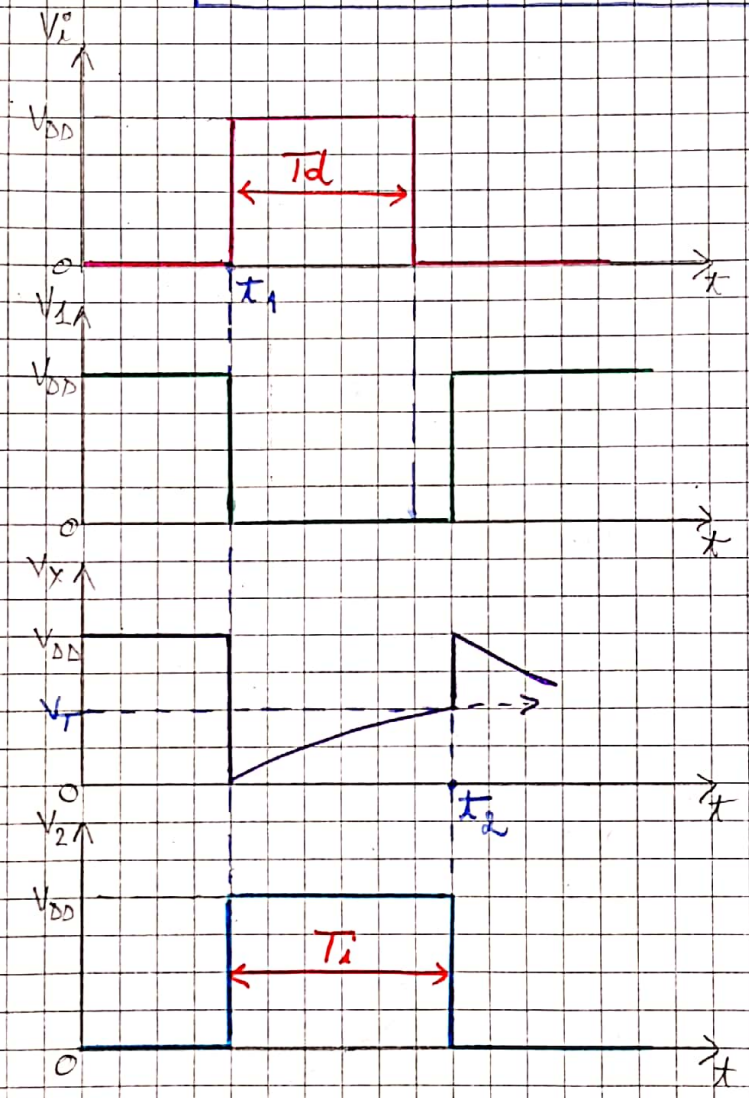

Exemplu:

- pt. $V_T = \frac{1}{3} V_{DD}$

$$T_i = RC \ln \frac{V_{DD} - 0}{V_{DD} - \frac{1}{3} V_{DD}} =$$

$$T_i = RC \ln \frac{3}{2} \simeq 0{,}4\, RC$$

- pt. $V_T = \frac{1}{2} V_{DD}$

$$T_i = RC \ln \frac{V_{DD} - 0}{V_{DD} - \frac{1}{2} V_{DD}} =$$

$$T_i = RC \ln 2 \simeq 0{,}7\, RC$$

- pt. $V_T = \frac{2}{3} V_{DD}$

$$T_i = RC \ln \frac{V_{DD} - 0}{V_{DD} - \frac{2}{3} V_{DD}} =$$

$$T_i = RC \ln 3 \simeq 1{,}1\, RC$$

Circuite basculante monostabile cu CMOS compensat

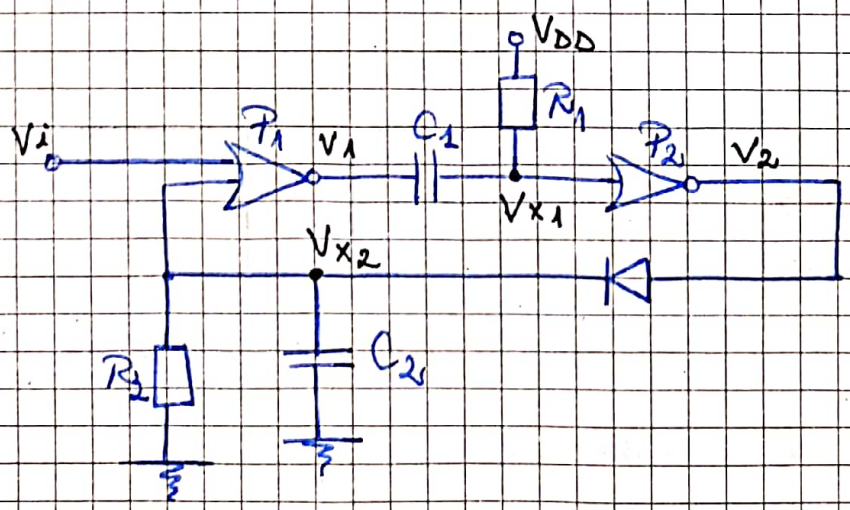

Scanned by CamScanner

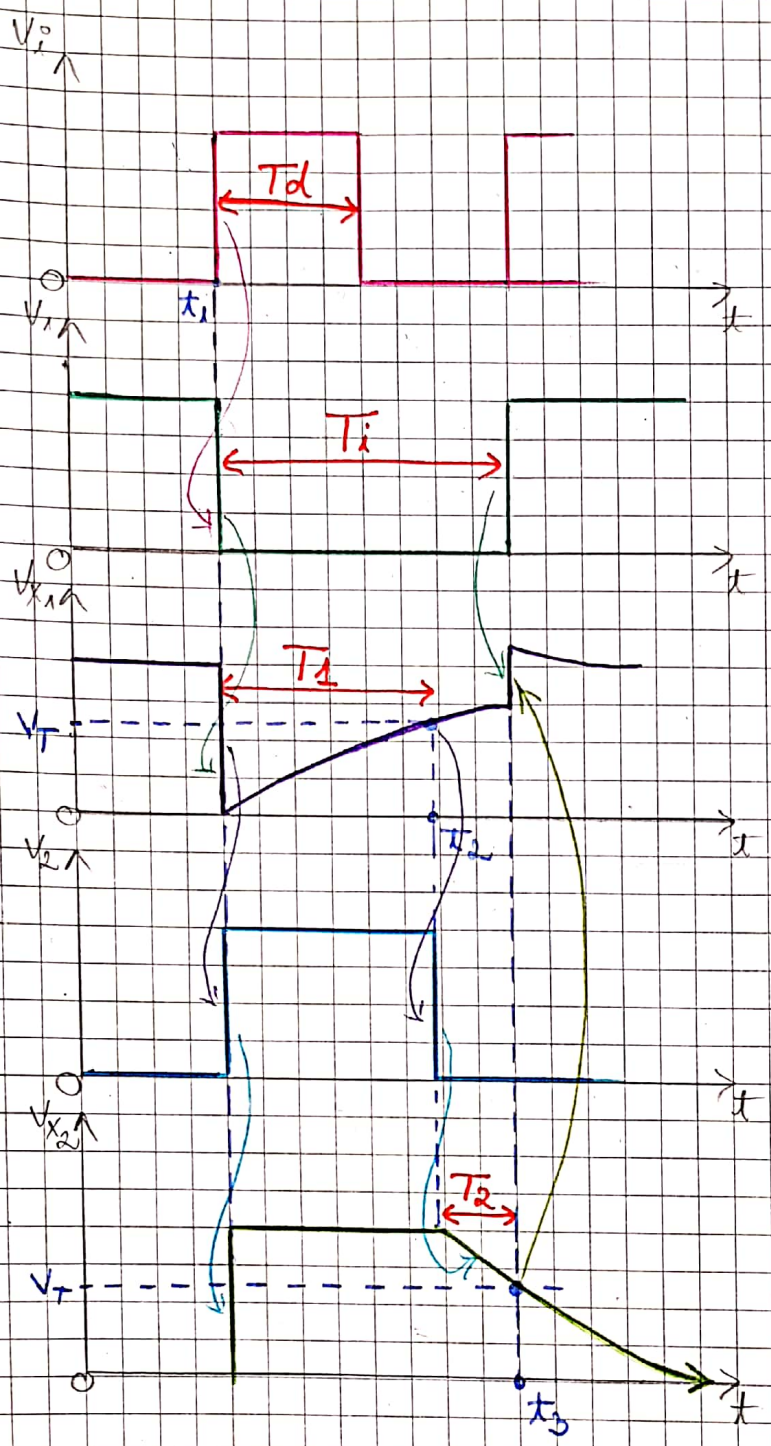

$$T_i = T_1 + T_2$$

$$T_1 = R_1 C_1 \ln \frac{V_{DD} - 0}{V_{DD} - V_T}$$

$$T_2 = R_2 C_2 \ln \frac{0 - V_{DD}}{0 - V_T}$$

$$R_1 C_1 = R_2 C_2 = RC$$

Exemplu :

- pt. $V_T = \frac{1}{3} V_{DD}$

$$T_i = T_1 + T_2 = RC \ln \frac{V_{DD} - 0}{V_{DD} - \frac{1}{3} V_{DD}} + RC \ln \frac{V_{DD}}{\frac{1}{3} V_{DD}}$$

$$T_i = RC \left(\ln \frac{3}{2} + \ln 3 \right)$$

$$T_i \simeq RC \, (0{,}4 + 1{,}1) = 1{,}5 \, RC$$

- pt $V_T = \frac{1}{2} V_{DD}$

$$T_i = RC \ln \frac{V_{DD} - 0}{V_{DD} - \frac{1}{2} V_{DD}} + RC \ln \frac{V_{DD}}{\frac{1}{2} V_{DD}}$$

$$T_i = RC \left(\ln 2 + \ln 2 \right) \simeq 1{,}4 \, RC$$

- pt $V_T = \frac{2}{3} V_{DD}$

$$T_i = RC \ln \frac{V_{DD} - 0}{V_{DD} - \frac{2}{3} V_{DD}} + RC \ln \frac{V_{DD}}{\frac{2}{3} V_{DD}}$$

$$T_i = RC \left(\ln 3 + \ln \frac{3}{2} \right) \simeq 1{,}5 \, RC$$

Scanned by CamScanner